Heinzmann GmbH & Co. KG
Engine & Turbine Controls
Am Haselbach 1
D-79677 Schönau (Schwarzwald)
Germany
Phone +49 7673 8208-0
Fax +49 7673 8208-188
E-mail info@heinzmann.com
www.heinzmann.com
V.A.T. No.: DE145551926

HEINZMANN®

Digital Speed Governors

Digital Basic System

PANDAROS IV

DG 2005DP.6 - 01 up to - 05

DG 2040DP.6 - 01 up to - 05

Copyright 2001 by Heinzmann GmbH & Co. KG. All rights reserved. This document may not be reproduced or handed on to third parties.

Manual DG 01 004-e / 10-02

Warning	Read this entire manual and all other publications appertaining to the work to be performed before installing, operating or servicing your equipment. Practice all plant and safety instructions and precautions.
Danger	Failure to follow instructions may result in personal injury and/or damage to property.
Danger! High Voltage **Danger**	**Please note before commissioning the installation:** Before starting to install any equipment, the installation must have been switched dead! Be sure to use cable shieldings and power supply connections meeting the requirements of the *European Directive concerning EMI*. Check the functionability of the existing protection and monitoring systems.
Danger	**To prevent damages to the equipment and personal injuries, it is imperative that the following monitoring and protection systems have been installed:** Overspeed protection acting independently of the speed governor Overtemperature protection **Generator installation will in addition require:** Overcurrent protection Protection against faulty synchronization due to excessive frequency, voltage or phase differences Reverse power protection
	Overspeeding can be caused by: Failure of the voltage supply Failure of the control unit or of any accessory device Failure of the actuator Sluggish and blocking linkage

Warning	**Electronically controlled injection (MVC) will in addition require to observe the following:** With **Common Rail** systems a separate mechanical flow limiter must be provided for each injector pipe. With **Pump-Pipe-Nozzle (PPN)** and **Pump Nozzle (PNE)** systems fuel release may be enabled only by the movement of control piston of the solenoid valve. This is to inhibit fuel from being delivered to the injection nozzle in case of seizure of the control piston.
Warning	The examples, data and any other information in this manual are intended exclusively as instruction aids and should not be used in any particular application without independent testing and verification by the person making the application.
Danger	Independent testing and verification are especially important in any application in which malfunction might result in personal injury or damage to property.
	HEINZMANN make no warranties, express or implied, that the examples, data, or other information in this volume are free of error, that they are consistent with industry standards, or that they will meet the requirements for any particular application.
	HEINZMANN expressly disclaim the implied warranties of merchantability and of fitness for any particular purpose, even if **HEINZMANN** have been advised of a particular purpose and even if a particular purpose is indicated in the manual.
	HEINZMANN also disclaim all liability for direct, indirect, incidental or consequential damages that result from any use of the examples, data, or other information contained in this manual.
	HEINZMANN make no warranties for the conception and engineering of the technical installation as a whole. This is the responsibility of the user and of his planning staff and specialists. It is also their responsibility to verify whether the performance features of our devices will meet the intended purposes. The user is also responsible for correct commissioning of the total installation.

Contents

Page

1 General **1**

2 Functions **2**
2.1 General Functions 2
2.2 Variation specific additional Functions 3
2.2.1 Variation DC 6-01 (Standard Generator) 3
2.2.2 Variation DC 6-02 (Standard General) 3
2.2.3 Variation DC 6-03 (Extended Generator 1) 4
2.2.4 Variation DC 6-04 (Extended Generator 2) 4
2.2.5 Variation DC 6-05 (Extended General, especially vehicle) 4

3 Further Informations **5**

4 Block Diagram **6**

5 Sensors **7**
5.1 Overview 7
5.2 Magnetic Pickup IA 8
5.2.1 Technical Datas 8
5.2.2 Installation 8
5.2.3 Tooth profile 9
5.2.4 Clearance of Magnetic Pickup 9
5.2.5 Mounting Measurements 10
5.3 Cooling Medium Temperature Sensor TS 01 - 28 - PT 1000 10
5.4 Pressure Sensors 11
5.4.1 Oil Pressure Sensor 11
5.4.2 Boost Pressure Sensors 12
5.4.2.1 Boost Pressure Sensor with Plug 13
5.4.2.2 Boost Pressure Sensor with Housing and Terminal Strip 13

6 Set point Adjusters **15**
6.1 Set point Potentiometer SW 01 - 1 - b (1 turn) 15
6.2 Set point Potentiometer SW 02 - 10 - b (10- turn) 15
6.3 Set point Value Adjustment by Current Signal 16
6.4 Digital Presetting of Set point Values 16
6.5 Set point Value Adjustment by Pedal 16
6.6 Pneumatic Set point Adjuster 16

7 Control Unit DC 6 – 01..05 17
7.1 Specification 17
7.1.1 General 17
7.1.2 Inputs and Outputs 18
7.2 Measurements 19
7.3 Mounting 21

8 Actuators 22
8.1 Design and Mode of Operation 22
8.2 Installation 23
8.3 Specification 24
8.4 Measurements 25

9 Electrical Connection 26
9.1 Connection for variation DG 6-01 (Standard Generator) 26
9.2 Connection for variation DG 6-02 (Standard General) 27
9.3 Connection for variation DG 6-03 (Extended Generator 1) 28
9.4 Connection for variation DG 6-04 (Extended Generator 2) 29
9.5 Connection for variation DG 6-05 (Extended General) 30
9.6 Harness 31

10 Parameterization Possibilities 33
10.1 Parameterization at the Factory 33
10.2 Parameterization with the Hand Held Programmer 3 33
10.3 Parameterization with the Keybord on the Control Unit 33
10.4 Parameterization with the PC 33
10.5 Parameterization with User Masks 34
10.6 Transferring Data Sets 34
10.7 Assembly Line End Programming 34

11 Starting the Engine - Brief Instructions 35

12 Order Information 36

13 Order Specifications for Manuals 37

1 General

The **HEINZMANN** Digital Governors of the PANDAROS series have been designed as speed governors for diesel and gas engines with low and medium power. In addition to their primary purpose of controlling speed, these governors are capable of performing some other tasks and functions.

The control system consists of the control unit, the actuator, the set point adjusters, the sensors, and the connection cables.

The control unit includes the control electronics. At the core of the control unit is a very fast and powerful 16 bit microprocessor. The actual controller programme based on which the processor operates is permanently stored in a FLASH-EPROM.

The current engine speed is sensed by a magnetic pickup on the flywheel or a measuring wheel.

One temperature sensor can measure the engine temperature and can cause changing of governor parameters or alarm messages.

The speed set point, additional sensor inputs and the inputs for the analogue accessory are depending on variations. There are 5 standard variations available. More variations are possible on customer request.

All variations are available optional with integrated hand programmer.

With the serial interface ISO 9141 resp. RS 232 is communication to other devices possible.

2 Functions

The **HEINZMANN** electronic governors of PANDAROS series are speed governors that offer a small range of functions. Even so, in addition to speed regulation, there are depending on the variation the following functions available:

2.1 General Functions

a) Start Quantity Adjustment

For setting start quantity, minimum start quantity or maximum start quantity may alternatively be selected. If necessary either can be configured in dependence of temperature. Furthermore, variable start quantity can be provided, by which start quantity is automatically increased during start-up.

b) Speed Ramps

For applications where speed is not supposed to respond to changes of set point values as fast as possible, a speed ramp is available. According to requirements, it may be parameterized separately for increasing or decreasing speed. In addition, a separate speed ramp is provided for start-up which will make the engine ramp slowly to operating speed after starting.

c) All speed governing with adjustable droop

Some applications require speed governing with droop, e.g., generator parallel operation without **HEINZMANN** load measuring unit. The droop can be adjusted as desired. With droop adjusted to 0, the governor operates in isochronous mode.

d) Setting the speed range

The minimum and maximum speed adjustable by the (external) set point, can be parameterised.

e) Engine stop

When the switch input for engine shutdown is activated, the governor will cause the actuator to fully pull to stop direction until the engine has stopped.

f) Over speed protection

An over speed point can be parameterised. If this point is overcome, the governor will issue an alarm and the actuator will fully pull to stop direction.

g) Correction of PID Parameters

To optimize the dynamics for every operating point, the PID parameters may be corrected in dependence of speed, temperature and load by means of freely programmable stability maps.

h) Speed Dependent Quantity Limitation

It is possible to programme quantity limitation curves in dependence of speed so that for all speeds there can be torque reduction as is admissible for the engine or desired by the user.

i) Temperature Dependent Idling Speed and Quantity Limitation

At low temperatures, the engine can be run at some higher idling speed. With the engine warming up, idling speed is reduced to its normal value. It is possible to programme quantity limitation curves in dependence of temperature so that for every temperature there will be torque reduction available as is admissible for the engine or desired by the user.

j) Operating Hour Meter

The operating hours when the engine is turning (speed is detected) will be added.

k) Failure Diagnosis and Display

If a sensor or the actuator is at fault, an alarm is issued and there will be a change-over to emergency operation if so provided or an engine shutdown. Internal errors get detected also and they will be stored as all other failures. All failures can be read out with an external hand programmer, the optional internal hand programmer, or, if a communication program with communication cable is existing with a PC or laptop computer.

l) Communication

Two serial interface ports are available: ISO 9141 and RS-232.

2.2 Variation specific additional Functions

2.2.1 Variation DC 6-01 (Standard Generator)

(refer to connection diagram page 26)

The set point is realized with two push buttons: increase speed and decrease speed.

2.2.2 Variation DC 6-02 (Standard General)

(refer to connection diagram page 27)

The set point is given by an analogue set point source (voltage source 0..5 V, current 4..20 mA or potentiometer 5 kΩ) and one switch input for fixed speed.

2.2.3 Variation DC 6-03 (Extended Generator 1)

(refer to connection diagram page 28)

The speed set point is realized with two switch inputs to increase speed and decrease speed each.

The **HEINZMANN** load measuring unit is connected to an additional analogue input for load governing in parallel operation.

An additional switch input it to select if the switch inputs for synchronization or the analogue input from the load measuring unit is active.

2.2.4 Variation DC 6-04 (Extended Generator 2)

(refer to connection diagram page 29)

The set point is given by an analogue set point source (voltage source 0..5 V, current 4..20 mA or potentiometer 5kΩ).

Two additional analogue inputs are used for connecting the **HEINZMANN** load measuring unit for load governing in parallel mode and for connecting the **HEINZMANN** synchronizer.

A switch input is to select if the inputs of the **HEINZMANN** units or if the analogue set point source is active.

2.2.5 Variation DC 6-05 (Extended General, especially vehicle)

(refer to connection diagram page 30)

The set point is given by an analogue set point source (voltage source 0..5 V, current 4..20 mA or potentiometer 5kΩ) and a switch input for fixed speed.

For turbocharged engines, fuelling can be reduced to achieve smokeless operation whenever there is no boost pressure (e.g., during start-up or on load changes). The respective limit curves can be programmed accordingly.

For the purpose of oil pressure monitoring, speed/pressure dependent limit curves can be provided. If oil pressure is low, an alarm is issued; if oil pressure continues to drop, the engine is shut down.

The governor may also be adjusted as an idle/max speed governor.

3 Further Information

This publication describes in detail the technical data and connections of the control electronics, of the sensors, of the set point adjusters and of the actuators.

The functions of the different adjustment parameters and characteristics are described in detail in the manual

Basic Information PANDAROS, Manual-No. DG 00 006-e.

The mode of operation of the communication programme DcDesk 2000 is described in detail in the manual

Operation Instructions of Communication Program DcDesk 2000,
Manual-No. DG 00 003-e.

4 Block Diagram

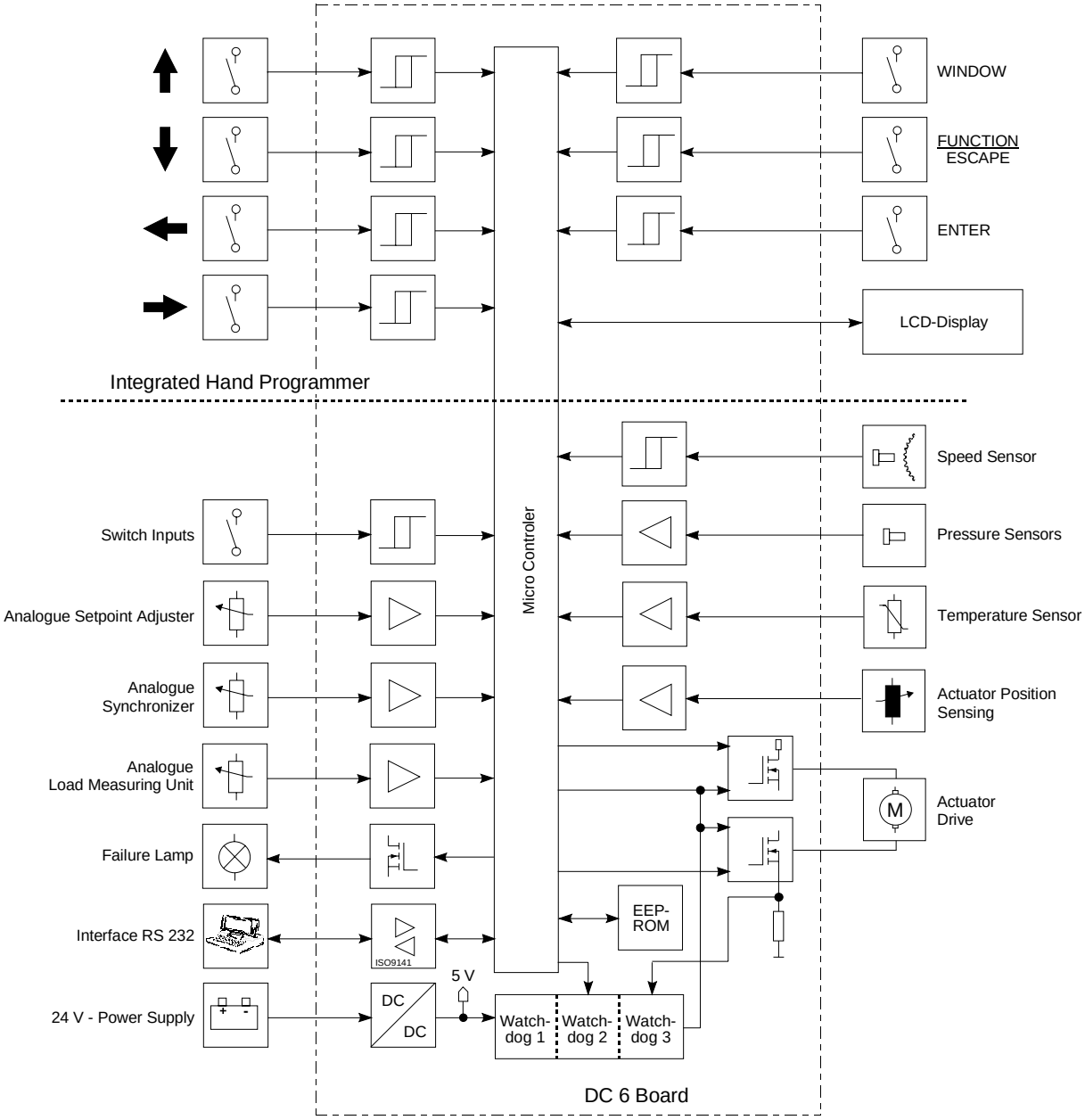

Fig. 1: Block Diagram

According to the different types, there are not all functions and inputs available!

5 Sensors

5.1 Overview

Sensor	Speed	Coolant Temperature	Oil Pressure	Boost Pressure
HZM Designation	IA ..	TS 01-28-PT1000	DSO 01-6 DSO 01-10	DSL/G 0..-2 DSL/G 0..-5 DSL/G 0..-10
Connection	SV 6-IA-2K 2 pole	SV 6-IA-2K 2 pole	DIN 43650 A 2 Line System	DIN 43650 A 2 Line System
Measuring Procedure	inductive, active	PT1000, passive	active	active
Measuring Range	50...9.000 Hz	-50...+150°C	0...6 bar 0...10 bar	0...2 bar 0...5 bar 0...10 bar
Supply Voltage Range		passive	10...34 V DC	12...36 V DC
Output Signal Range	0...10 V AC	ca. 700...1500 Ohm	4...20 mA	4...20 mA
Operating Temperature Range	-55...+120°C	-50...+150°C	-25...+125°C	-40...+100°C

In order to ensure maximum flexibility with regard to the sensors, the minimum/ maximum current values and the measuring ranges of the pressure and temperature sensors have been provided programmable.

5.2 Magnetic Pickup IA ...

5.2.1 Technical Data

Operating principle	inductive sensor
Distance from sensing gear	0.5 .. 0.8 mm
Output	0 V .. 10 V AC
Signal form	Sine (depending on tooth shape)
Resistance	approx.. 52 Ohm
Temperature range	-55°C up to +125°C
Protection grade	IP 55
Vibration	< 10g, 10 .. 100 Hz
Shock	< 50g, 11 ms half sine wave
Corresponding plug	SV 6 - IA - 2K (EDV- No.: 010-02-170-00)

5.2.2 Installation

The installation of the pickup has to be arranged in such a way as to obtain a frequency as high as possible. Normally, the **HEINZMANN** governors of the series PANDAROS are designed for a maximum frequency of 9000 Hz. Frequency (by Hz) is calculated according to the formula

$$f_{(Hz)} = \frac{n(1/\min) * z}{60}$$

z = number of teeth on the pickup wheel

Example:

n = 1.500
z = 160

$$f = \frac{1500 * 160}{60} = 4.000 \text{ Hz}$$

NB: It should be taken care that the speed can be measured by the pulse pickup without any bias. For best results therefore, the speed pickup should take the engine speed from the crankshaft. A suitable position for this is, e.g., the starter gear (but not the injection pump wheel).

The pickup gear must consist of magnetic material (e.g., steel, cast iron).

5.2.3 Tooth profile

Any tooth profile is admissible. The top width of the tooth should be 2.5 mm minimum, the gap and the depth of the gap at least 4 mm. For index plates the same dimensions are valid.

Due to tolerances, a radial arrangement of the magnetic pickup is preferable..

5.2.4 Clearance of Magnetic Pickup

The distance between the magnetic pulse pickup and the tooth top should range from 0.5 and 0.8 mm. (It is possible to screw in the magnetic pickup till it touches the tooth and then unscrew it for about half a turn.)

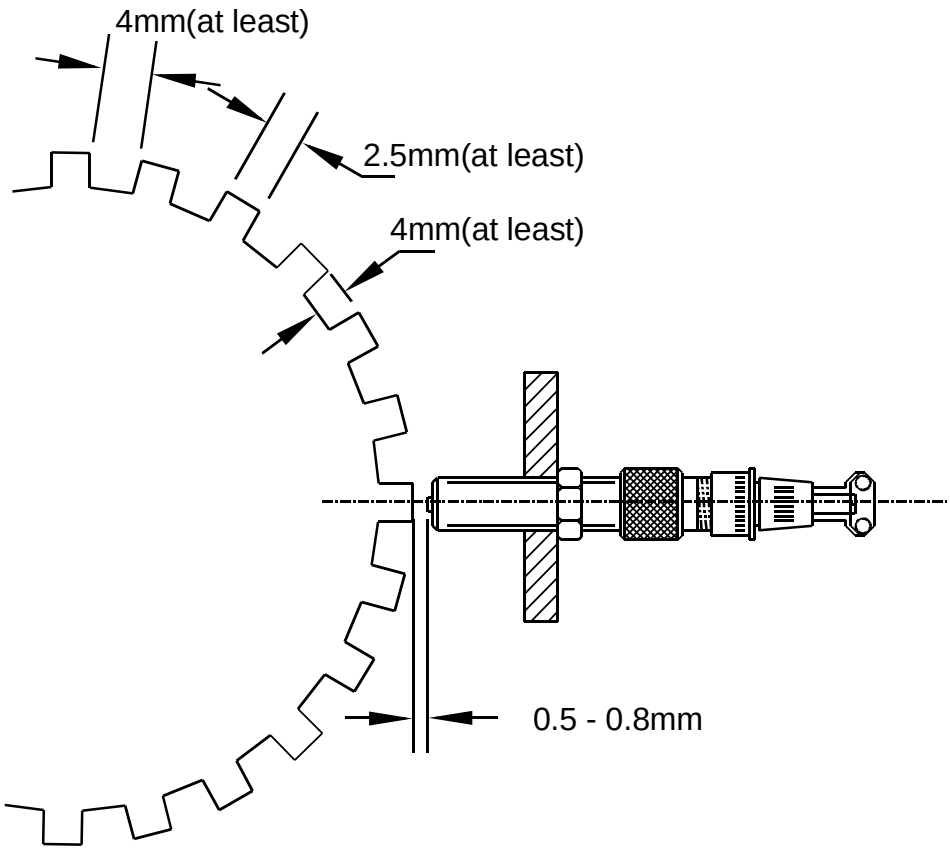

Fig. 2: Clearance of Pickup

5.2.5 Mounting Measurements

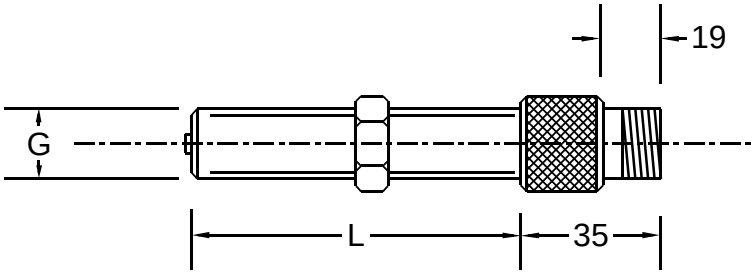

Fig. 3: Measurements of Pickup

Measures / Type	L (mm)	G	Remarks
01 - 38	38	M 16 x 1,5	appropriate plug SV6-IA-2K
02 - 76	76	M 16 x 1,5	
03 - 102	102	M 16 x 1,5	
11 - 38	38	5/8"-18UNF-2A	
12 - 76	76	5/8"-18UNF-2A	
13 - 102	102	5/8"-18UNF-2A	

Ordering specification, e.g. IA 02-76

5.3 Cooling Medium Temperature Sensor TS 01 - 28 - PT 1000 (EDV- No.: 600 00 053 00)

Measuring range	-50°C up to +150°C
Precision	±1.5°C
Resistance at 25 °C (R25)	1000 Ohm ±0.5 %
Maximum operating voltage	5 V
Maximum operating current	3 mA
Recommended operating current	approx 1mA
Time constant in fluids	approx. 13 seconds
Admissible temperature range connector socket	-40°C up to +105°C
Protection grade	IP 65
Vibration	< 20 g, 10 - 300 Hz
Shock	< 50 g, 11 ms half-sine wave
Tightening torque	50 Nm ±15 %
Connector	SV 6 - IA - 2K (EDV- No.: 010 02 170 00)

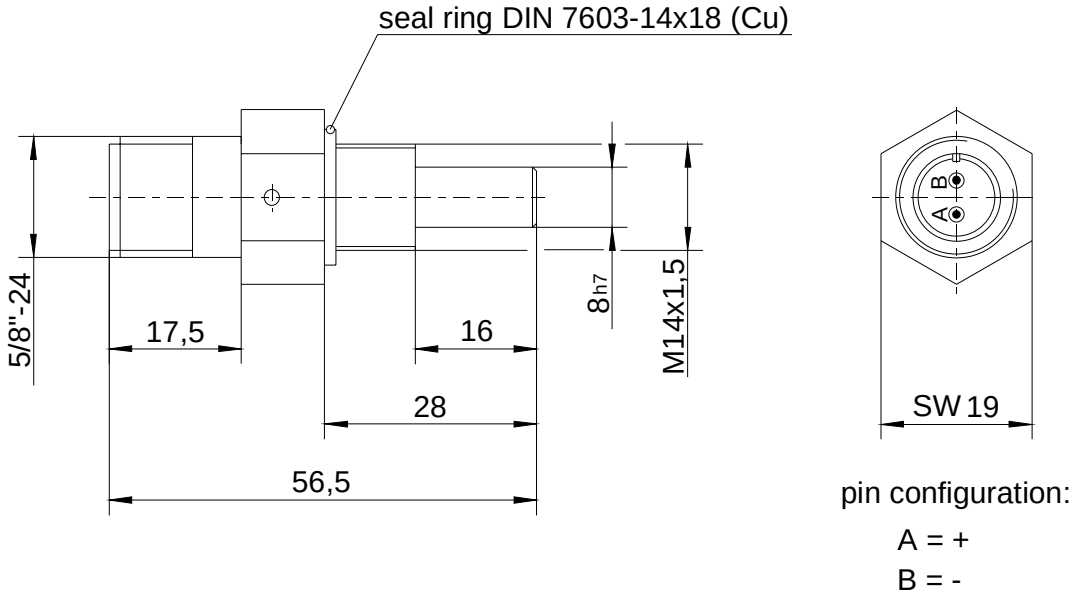

Fig. 4: Temperature Sensor TS 01 - 28 - PT 1000

5.4 Pressure Sensors

5.4.1 Oil Pressure Sensor

Measuring range	0 - 6 bar or 0 - 10 bar
Over pressure	15 bar resp. 20 bar
Supply voltage	10 - 34 V DC
Output signal	4 - 20 mA
Storage temperature	-25°C up to +85°C
Ambient temperature	-25°C up to +85°C
Oil temperature	-25°C up to +125°C
Protection grade	IP 65
Vibration	< 20 g, 10 - 300 Hz
Shock	< 50 g, 11 ms half-sine wave
Tightening torque	max. 25 Nm
Connection	DIN 43650-A, 2-line system

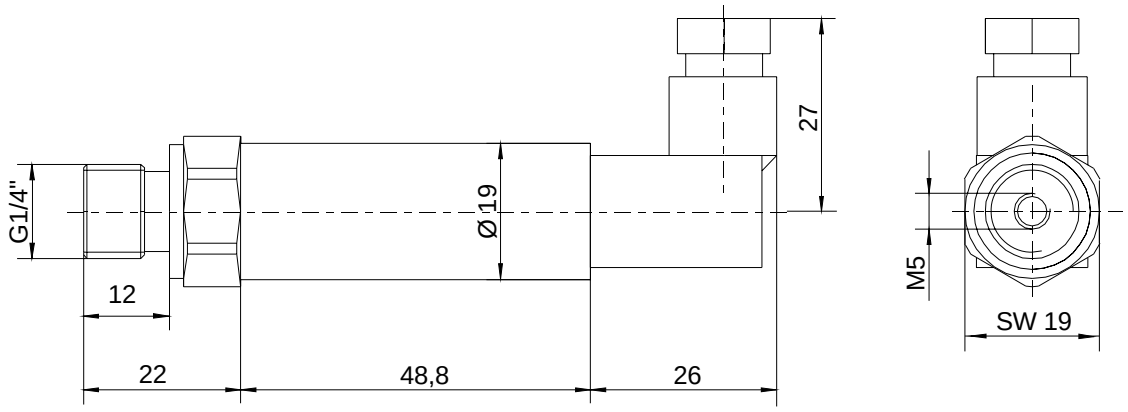

Fig. 5: Oil Pressure Sensor

Pressure Sensor	EDV- No.	Max. Operating Pressure (bar)
DSO 01 - 6	600-00-058-00	6
DSO 01 - 10	600-00-058-01	10

5.4.2 Boost Pressure Sensors

The boost pressure sensors are also available in an additional housing with terminal strip.

Measuring range	0 - 2 bar, 0 - 5 bar or 0 - 10 bar
Over pressure	4 bar resp. 10 bar resp. 16 bar
Supply voltage	12 - 36 V DC
Output signal	4 - 20 mA
Storage temperature	-55°C up to +100°C
Ambient temperature	-40°C up to +100°C
Protection grade	IP 65
Vibration	< 2 g, 5 - 500 Hz
Shock	< 50 g, 11 ms half-sine wave
Connection	DIN 43650-A or terminal strip, 2-line system

5.4.2.1 Boost Pressure Sensor with Plug

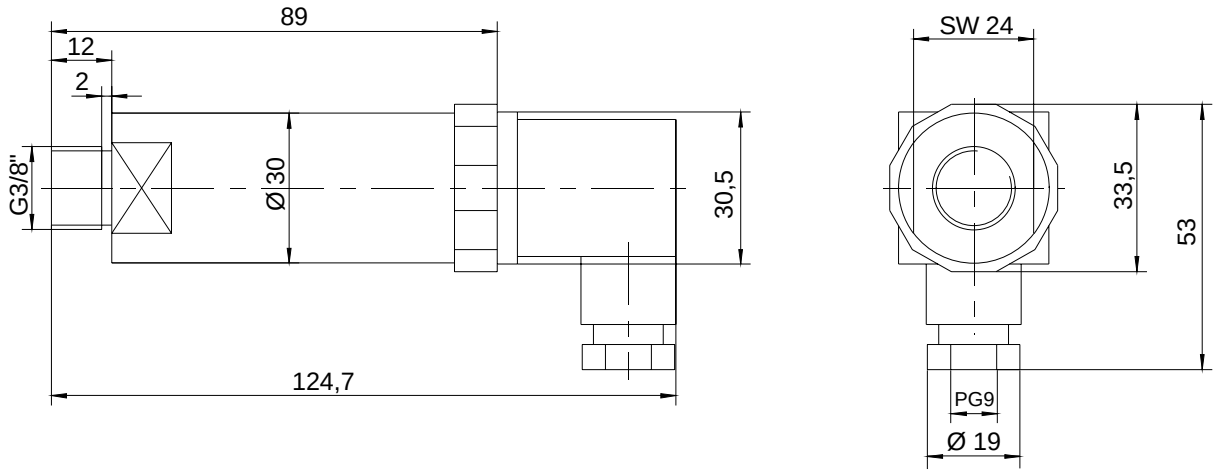

Fig. 6: Boost Pressure Sensor with Plug

Boost Pressure	EDV- No.	Max. Operating Pressure (bar rel.)
DSL 01 - 2	600-00-057-00	2
DSL 01 - 5	600-00-057-01	5
DSL 01 - 10	600-00-057-02	10

5.4.2.2 Boost Pressure Sensor with Housing and Terminal Strip

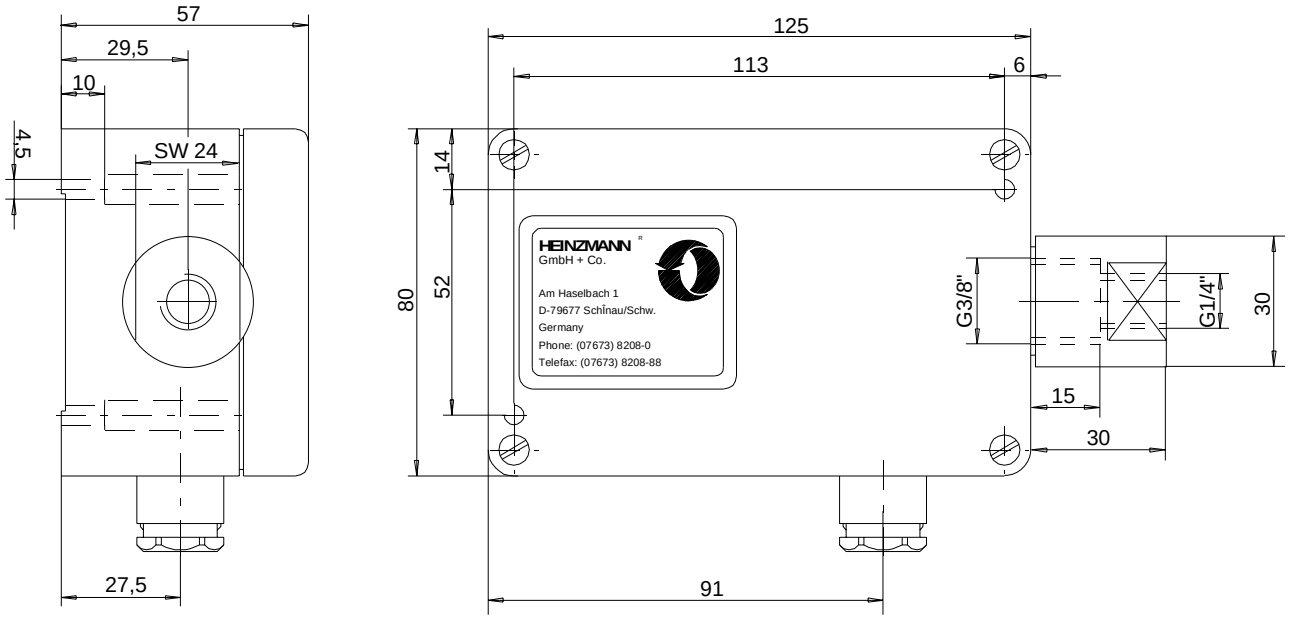

Fig. 7: Boost Pressure Sensor with Housing

Pressure Sensor	EDV- No.	Max. Operating Pressure (bar rel.)
DSG 04 - 2	600-00-056-00	2
DSG 04 - 5	600-00-056-01	5
DSG 04 - 10	600-00-056-02	10

6 Set point Adjusters

With regard to the variety of applications, various set point adjusters are available for the **HEINZMANN** digital speed governors of series PANDAROS.

6.1 Set point Potentiometer SW 01 - 1 - b (1 turn) (EDV- No.: 600 00 041 01)

Displacement angle	approx. 312°
Resistance	5 kOhm
Temperature range	-55°C to + 120°C
Protection grade	IP 00

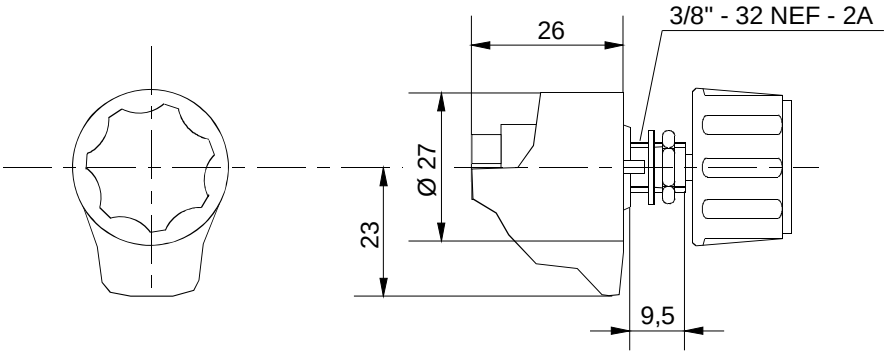

Fig. 8: Potentiometer SW 01 - 1 - b

6.2 Set point Potentiometer SW 02 - 10 - b (10- turn) (EDV- No.: 600 00 042 01)

Displacement angle	10 turns
Resistance	5 kOhm
Temperature range	-55°C to + 120°C
Protection grade	IP 00

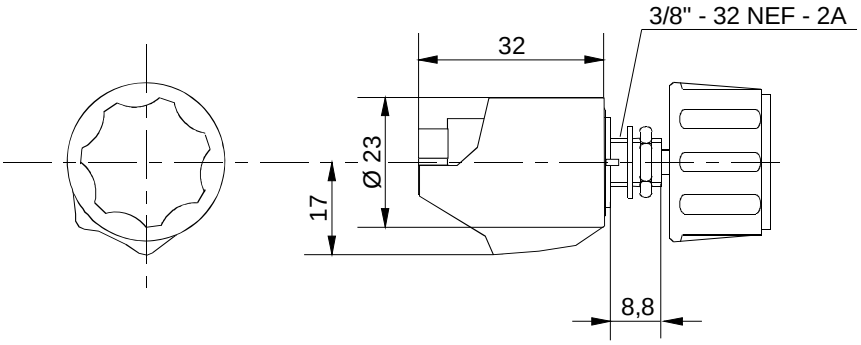

Fig. 9: Potentiometer SW 02 - 10 - b

On request, the potentiometers, as specified under 6.1. and 6.2. can be supplied with analogue adjustment knob with lock in place of the standard rotating knob. In this case, ordering specification is SW..-..-m.

Likewise, a clamping fixture can be installed instead of the knob. The ordering specification will then be SW ..-..-k.

6.3 Set point Value Adjustment by Current Signal

For the speed set point value a current signal of 4 – 20 mA can be directly connected to the control unit. If the signal fails, the governor will adjust minimum speed according to the 4 mA value or use a pre-programmed substitute value.

6.4 Digital Presetting of Set point Values

On condition that the governor is configured correctly, a digital set point source is possible directly with two switch inputs (increase/decrease speed), e.g. digital synchronizing manually or with PLC.

6.5 Set point Value Adjustment by Pedal

This unit is basically an angular position transducer that translates gas pedal positions into a proportional current or voltage for 0 - 45° rotational displacement. The resulting output can be used for speed setting. For more information refer to manual E 83 005 - e.

6.6 Pneumatic Set point Adjuster

If pneumatic set point adjustment is desired, the boost pressure sensors may be used to supply the signals. For detailed specifications of these sensors refer to chapter 5.5.2.

7 Control Unit DC 6 – 01..05

7.1 Specification

7.1.1 General

Supply voltage		12 V DC or 24 V DC
min. voltage		9 V DC
max. voltage		33 V DC
max. ripple voltage		max. 10 % at 100 Hz
Current consumption		max. 7 A, and max. 11 A for max. 60 Seconds
Permissible voltage dip at maximum current consumption		max. 10 % in control unit
Fuse protection of governor		12 A
Storing temperature		-40°C up to +85°C
Operating temperature		-40°C up to +80°C
Operating temperature LCD		0°C up to +50°C optional -20°C up to +70°C
Humidity		up to 98% at 55°C
Dynamic strength		max. 2 mm at 10 up to 20 Hz, max. 0,24 m/s at 21 up to 63 Hz max. 7 g at 64 up to 2000 Hz
Shock		50 g, 11 ms- half-sine wave
Protection grade		IP 00
Insulation resistance		> 1 MOhm at 48 V DC
Weight		approx. 0.5 kg
EMC	EMC Directives:	89/33/EWG, 95/54/EWG
	according to EMC Standards:	ISO 11452-2 ISO 7637-2 ISO 7637-3 VDE 0879-3 EN 50081-2 EN 50082-2
	further information on request	

7.1.2 Inputs and Outputs

All inputs and outputs are protected against reverse-voltage and short circuit to battery plus and minus.

Speed input		for inductive sensor, with f_i = 25 up to 9000 Hz, U_i = 0.5 up to 30 V AC
Temperature input		for PT1000 / Ni1000 sensors tolerance: < ±2°C at 0°C up to 130°C, rest < ±4°C
Reference voltage set point adjuster		U_{ref} = 5 V ±1 %, I_{ref} < 30 mA
Set point default analogue		U = 0..5 V, R_e = 100 kΩ, f_g = 15 Hz
	or	I = 4 .. 20 mA, R_e = 200 Ω, f_g = 15 Hz
Set point default digital 1		U_0 < 2 V, U_1 > 6.5 V, R_{pd} = 100 kΩ
Set point default digital 2		U_0 < 2 V, U_1 > 6.5 V, R_{pd} = 4.75 kΩ, oder R_{pu} = 4.75 kΩ oder R_{pd} = 150 kΩ
Digital input engine stop		U_0 < 2 V, U_1 > 6.0 V, R_{pd} = 4.75 kΩ or R_{pu} = 4.75 kΩ or R_{pd} = 150 kΩ
Actuator position sensing		internal in actuator with reference feedback
analogue		$U_{Reg.weg}$ = 1.4 ..3.0 V, U_{ref} = 8 V ±x %, I_{ref} < 20 mA
digital		only with HEINZMANN-StG and Bosch EDC
Drive output		I < 7 A, I < 11 A für T < 60 s, PWM
Digital output failure lamp		I_{sink} < 0.3 A, U_{rest} < 1.0 V, I_{leck} < 0.1 mA R_{pu} = 4.75 kΩ oder R_{pu} = ∞, ground switched
Serial interface ISO 9141, RS 232		variable from 2.4 kbit/s up to 57.6 kbit/s standard 9.6 kbit/s
Additional Inputs only for DC 6 – 03..05		U_e = 0..10 V, R_e = 20 kΩ, f_g = 15 Hz
	or	U_e = 0..5 V, R_e = 100 kΩ, f_g = 15 Hz
	or	I_e = 4 .. 20 mA, R_e = 200 Ω, f_g = 15 Hz
	or	U_0 < 2 V, U_1 > 6.5 V, R_{pd} = 4.75 kΩ
	or	R_{pu} = 4.75 kΩ oder R_{pd} = 150 kΩ

7.2 Measurements

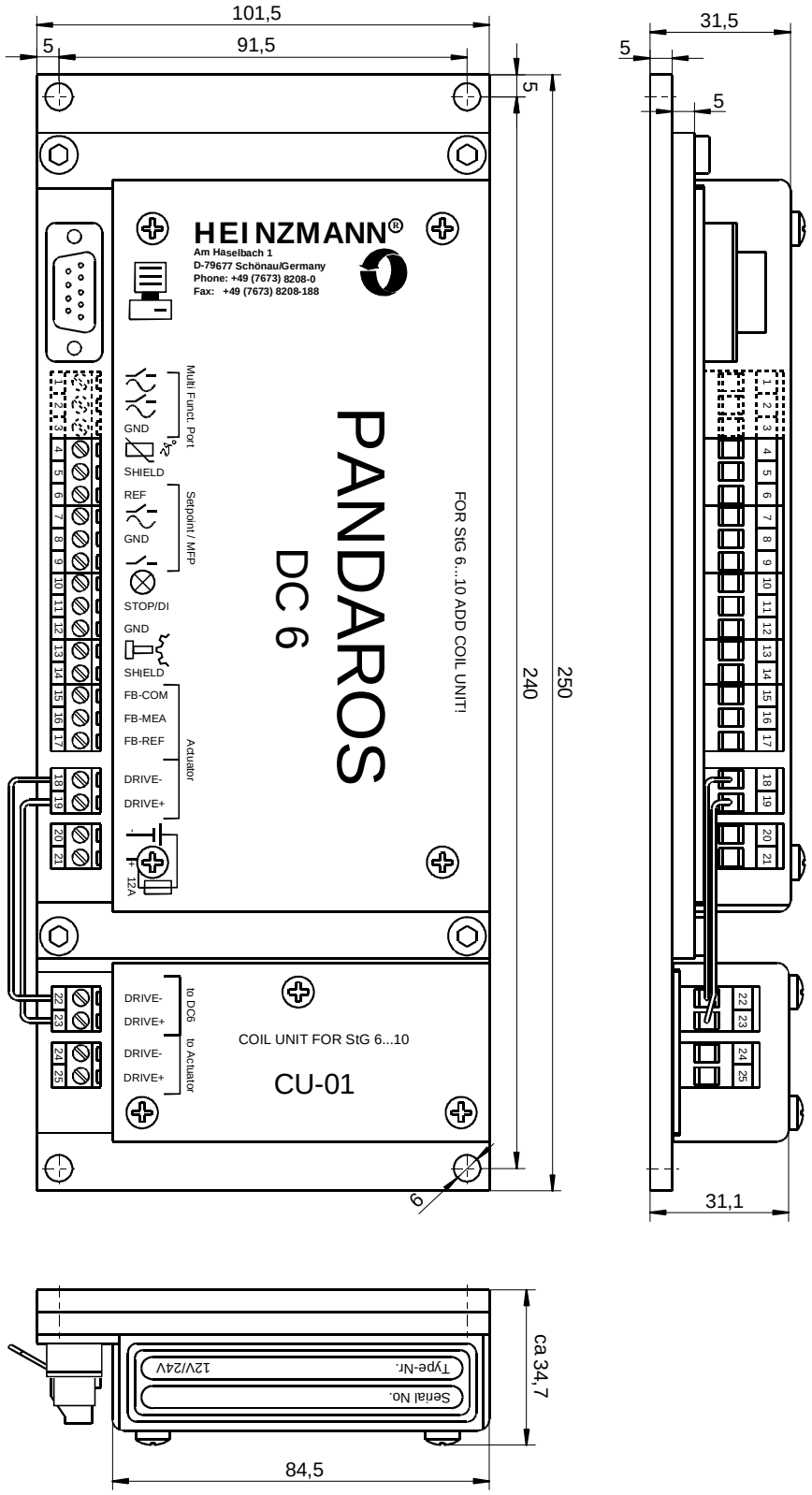

Fig. 10: Housing of Control unit DC 6-01..05 without Hand programmer

Note: The terminals 1 to 3 are not available at the standard versions DC 6-01 and DC 6-02.

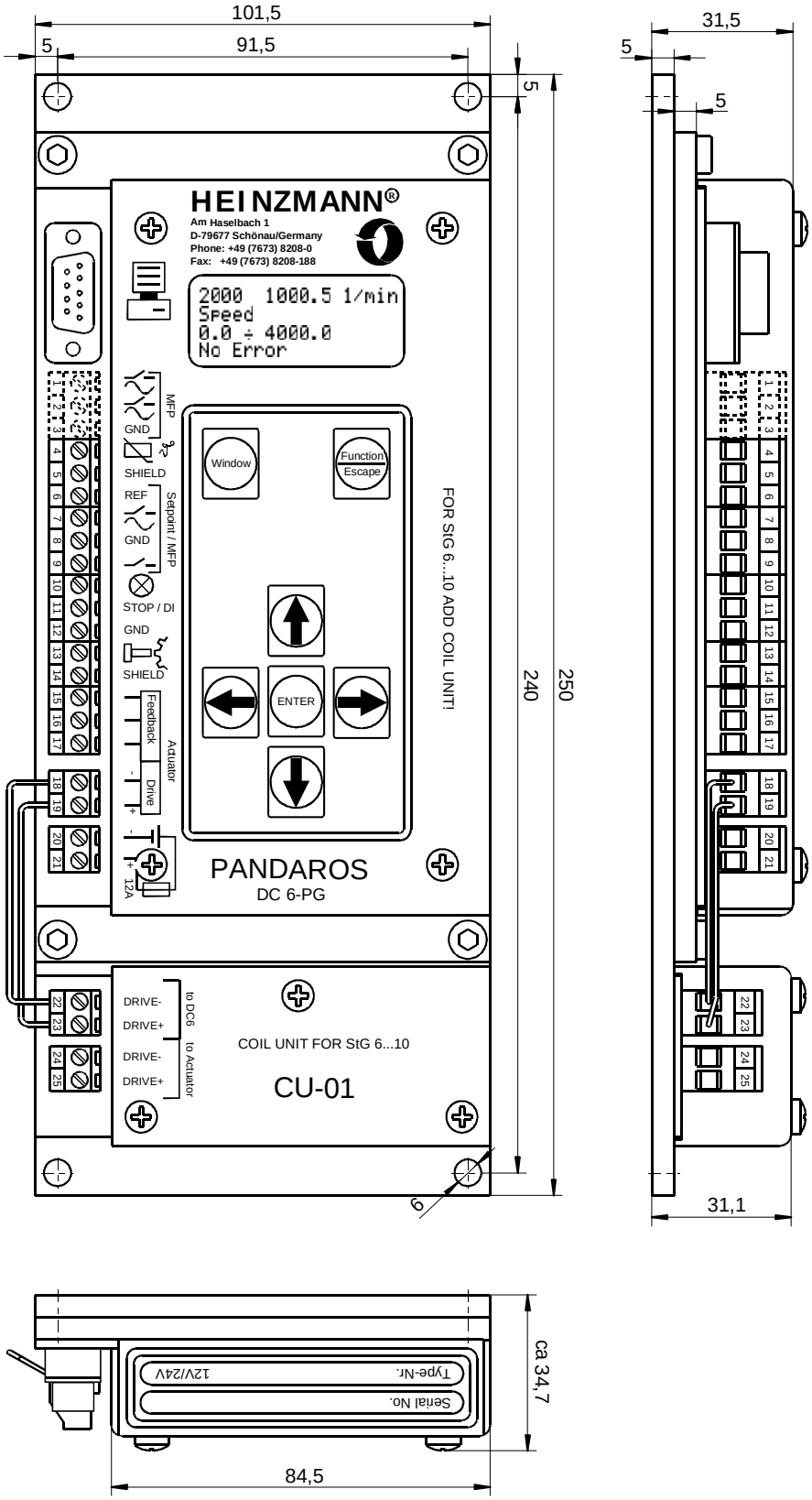

Fig. 11: Housing of Control unit DC 6-01..05 with integrated Hand programmer

Note: The terminals 1 to 3 are not available at the standard versions DC 6-01 and DC 6-02.

7.3 Mounting

When selecting the location, care should be taken for easy access in order to facilitate read-out of the failure indication and replacement of the device under field conditions. Any mounting position is admissible. When fitting the device directly on the engine, it should be mounted using vibration absorbers.

8 Actuators

8.1 Design and Mode of Operation

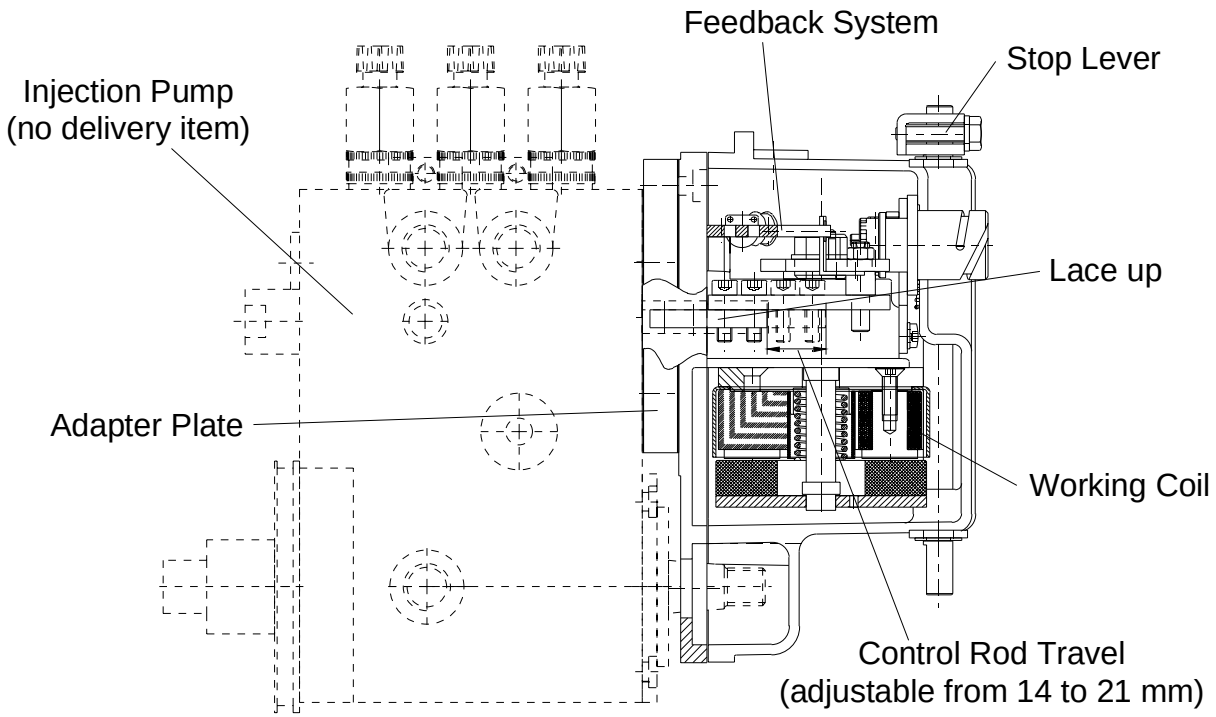

Fig. 12: Sectional Drawing of Actuator

A multipole-magnetised permanent magnet is mounted on the internal actuator shaft. Opposite the permanent magnet a coil shell with the working coils is fixed. On feeding current through the coils, torque and rotary motion in one direction is produced. Reversing current polarity will produce torque in the opposite direction.

The lever which is fixed to the internal shaft is connected to the control rod of the injection pump by a special linkage system. By this, the rotary motion of the internal shaft is directly transmitted as a linear motion to the control rod.

On the actuator shaft, also the governor feedback is firmly mounted which operates contact-free and transmits the position of the governor output shaft accurately to the control unit. By this, the control unit is able to rapidly calculate the linkage adjustment as required by speed changes, and to accommodate current accordingly.

An additional external lever provides the possibility of executing an emergency shutdown. However, in order to stop the engine by means of this stop lever it will be necessary to overcome the electric positioning force working in the direction of 100%. Therefore,

before executing an emergency shutdown by the stop lever, the voltage supply should first be switched off.

Due to the closed assemblage, the control linkage is fully protected for maintenance-free operation and long durability of the actuators.

If the actuator strikes against a stop, as may occur, e.g., under parallel mains operation or may be caused by engine overload or cylinder failure, the current limitation will take effect after approx. 20 seconds; by this the current to the actuator is reduced to a value that cannot harm the motor.

Altogether, this type of actuator provides the following advantages:

- High regulation power working in both directions.
- Extremely low current consumption during steady state and relatively low current consumption on change of load.
- Indifference to slow voltage changes of the supply; abrupt voltage changes cause governor disturbances.
- Due to direct assemblage, the linkage is fully protected and maintenance-free, and there is no need for complicated linkage adjustments.

8.2 Installation

For the different pump systems, a variety of assembly kits is provided consisting mainly of the adapter plate and the customer-specific linkage connection.

The assembly kits come with detailed assembling instructions which will help the user to do the mounting easily by himself.

8.3 Specification

	StG 2005 DP	StG 2040 DP
Maximum control rod travel	21 mm	21 mm
Spring power of back spring in stop position	approx. 15 N	approx. 30 N
Spring power of back spring in full position	25 N	50 N
Maximum positioning force	approx. 70 N	approx. 75 N
Maximum current consumption	6 A	6 A
Current consumption in operation	1.5 .. 3 A	1.5 .. 3 A
Coil resistance of governing magnet	1.4 Ohm	2 Ohm
Storage temperature	-55°C up to +110°C	-55°C up to +110°C
Ambient temperature in operation	-25°C up to +90°C	-25°C up to +90°C
Humidity	up to 100 %	up to 100 %
Protection grade	IP 55	IP 55
Weight	approx. 2.4 kg	approx. 4.2 kg

8.4 Measurements

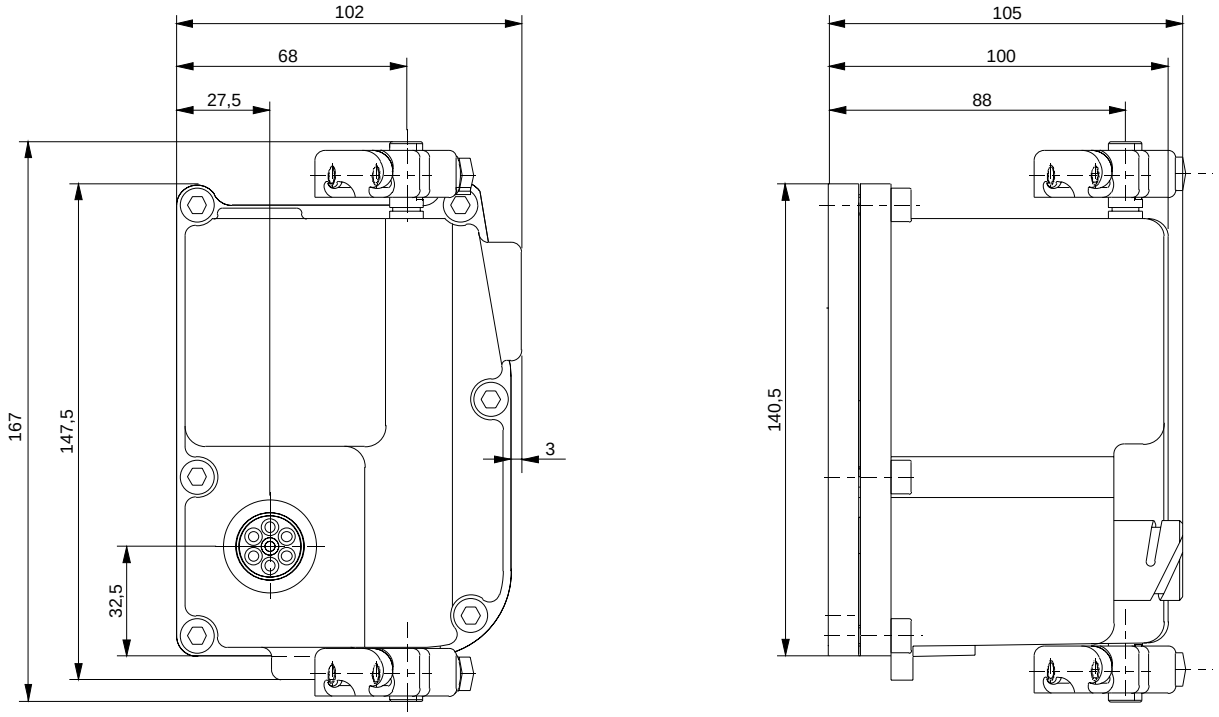

Fig. 13: Actuator StG 2005 DP

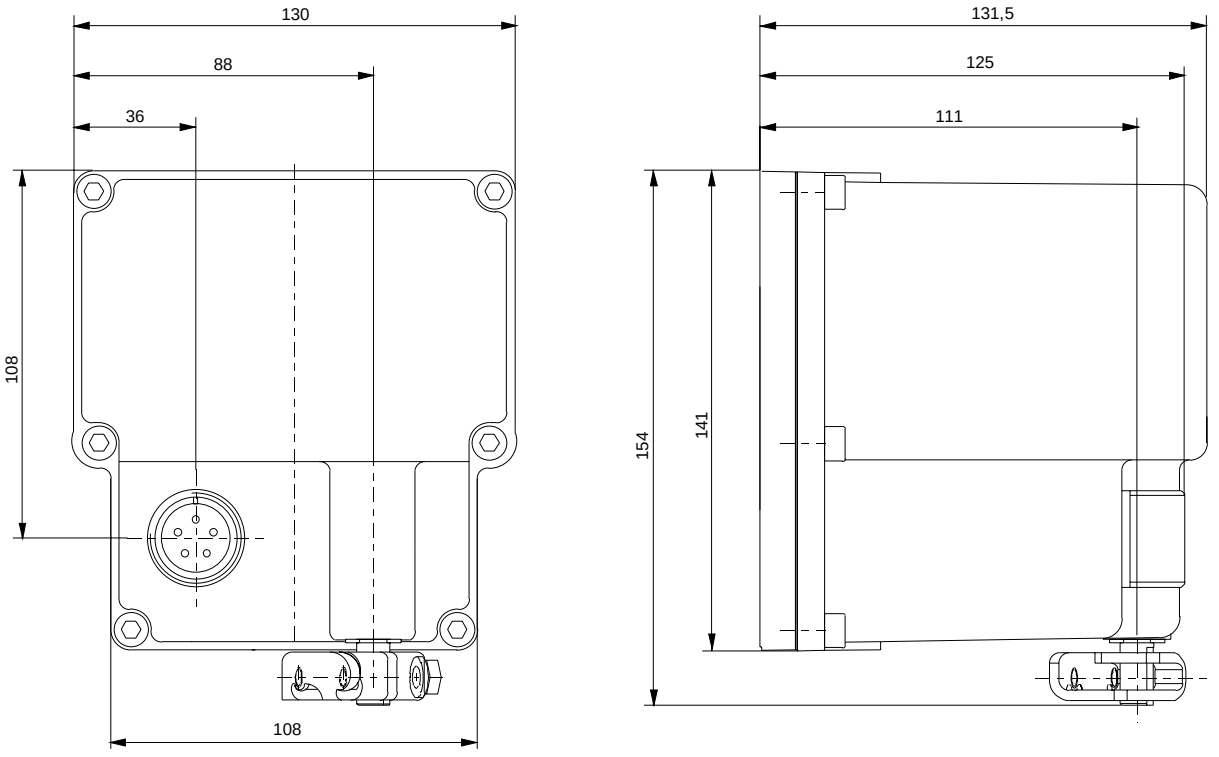

Fig. 14: Actuator StG 2040 DP

9 Electrical Connection

The electrical connection possibilities are depending on the variation of the control unit.

9.1 Connection for variation DG 6-01 (Standard Generator)

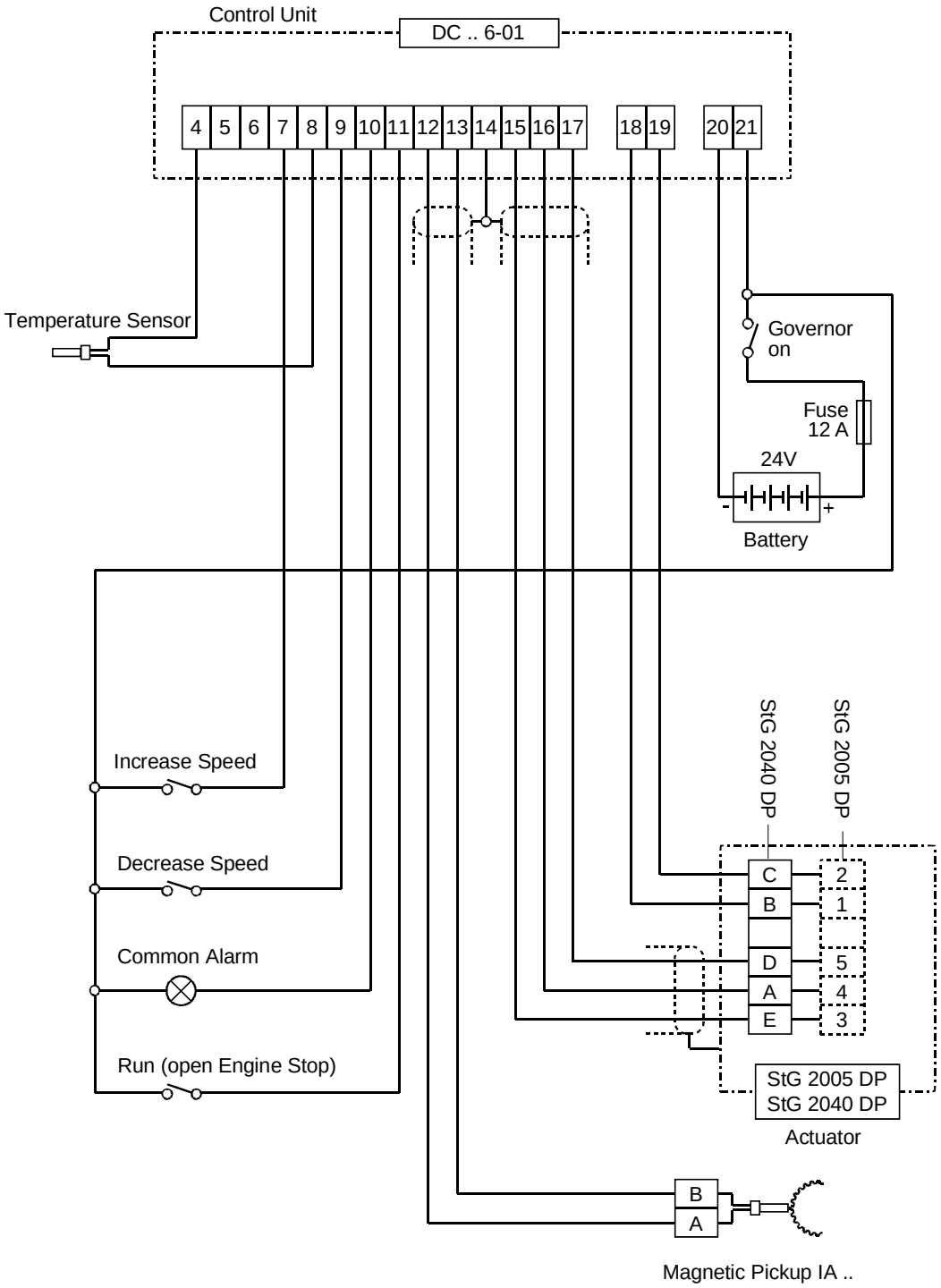

Fig. 15: Connection Diagram for Variation DG 6-01

9.2 Connection for variation DG 6-02 (Standard General)

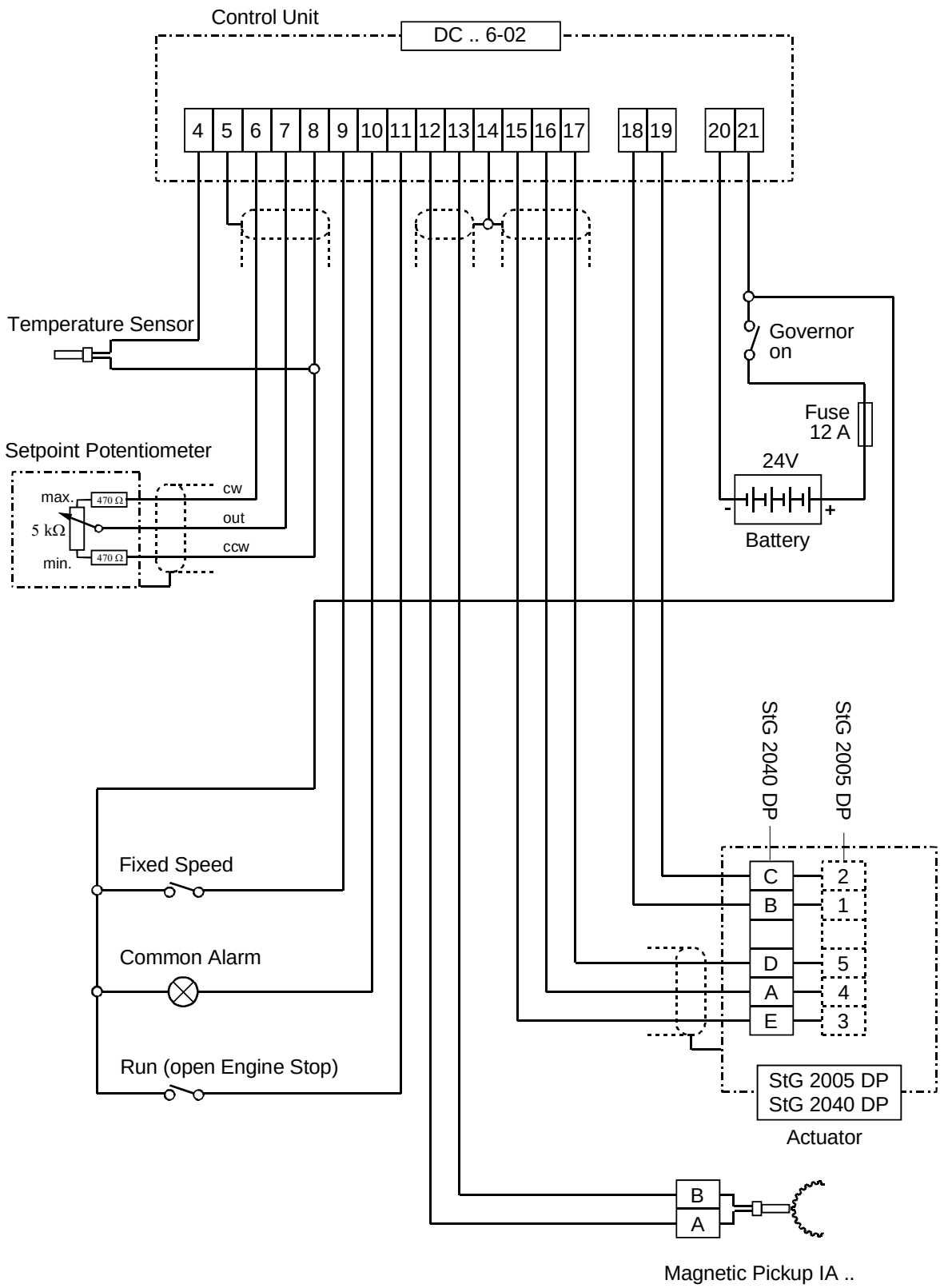

Fig. 16: Connection Diagram for Variation DG 6-02

9.3 Connection for variation DG 6-03 (Extended Generator 1)

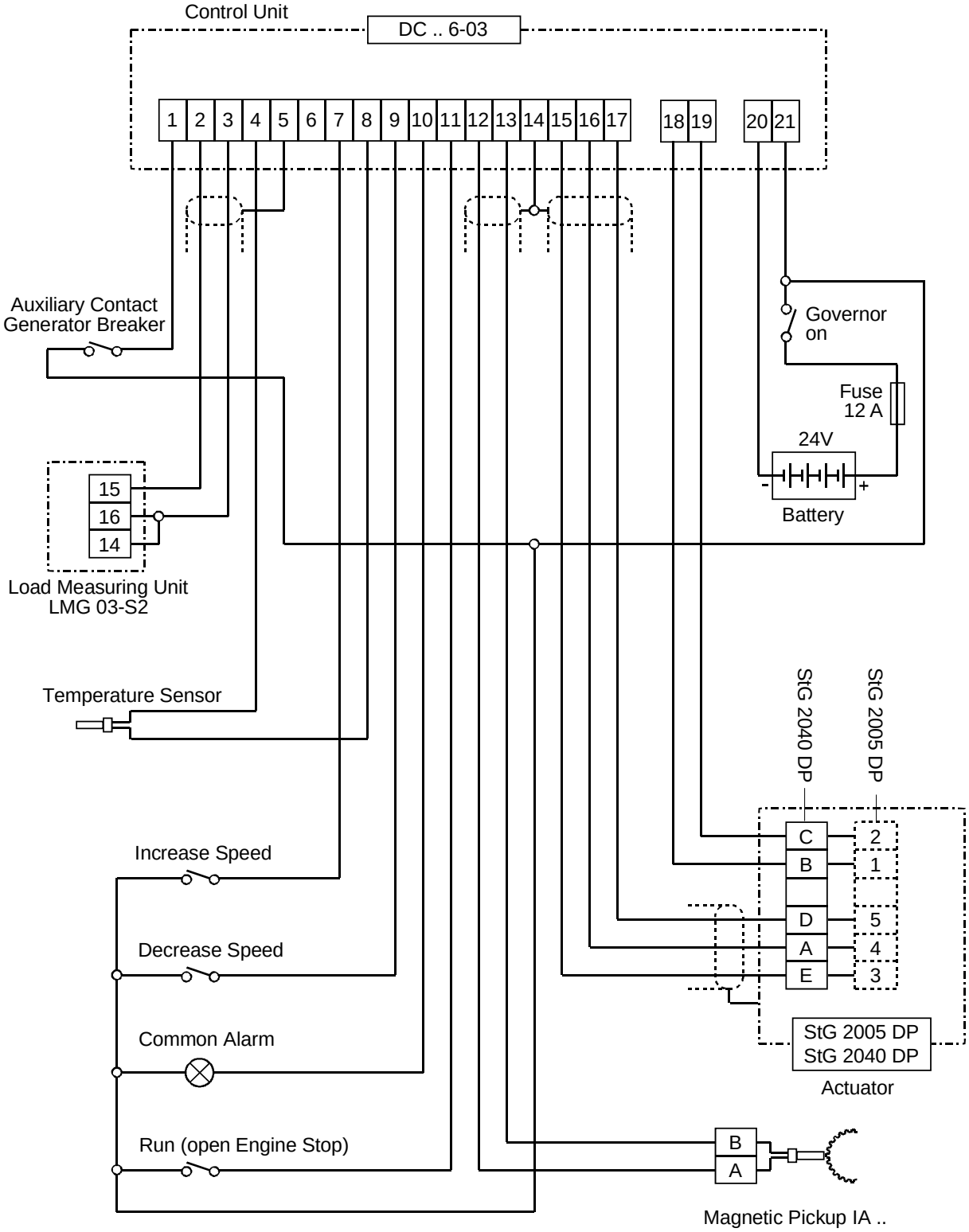

Fig. 17: Connection Diagram for Variation DG 6-03

9.4 Connection for variation DG 6-04 (Extended Generator 2)

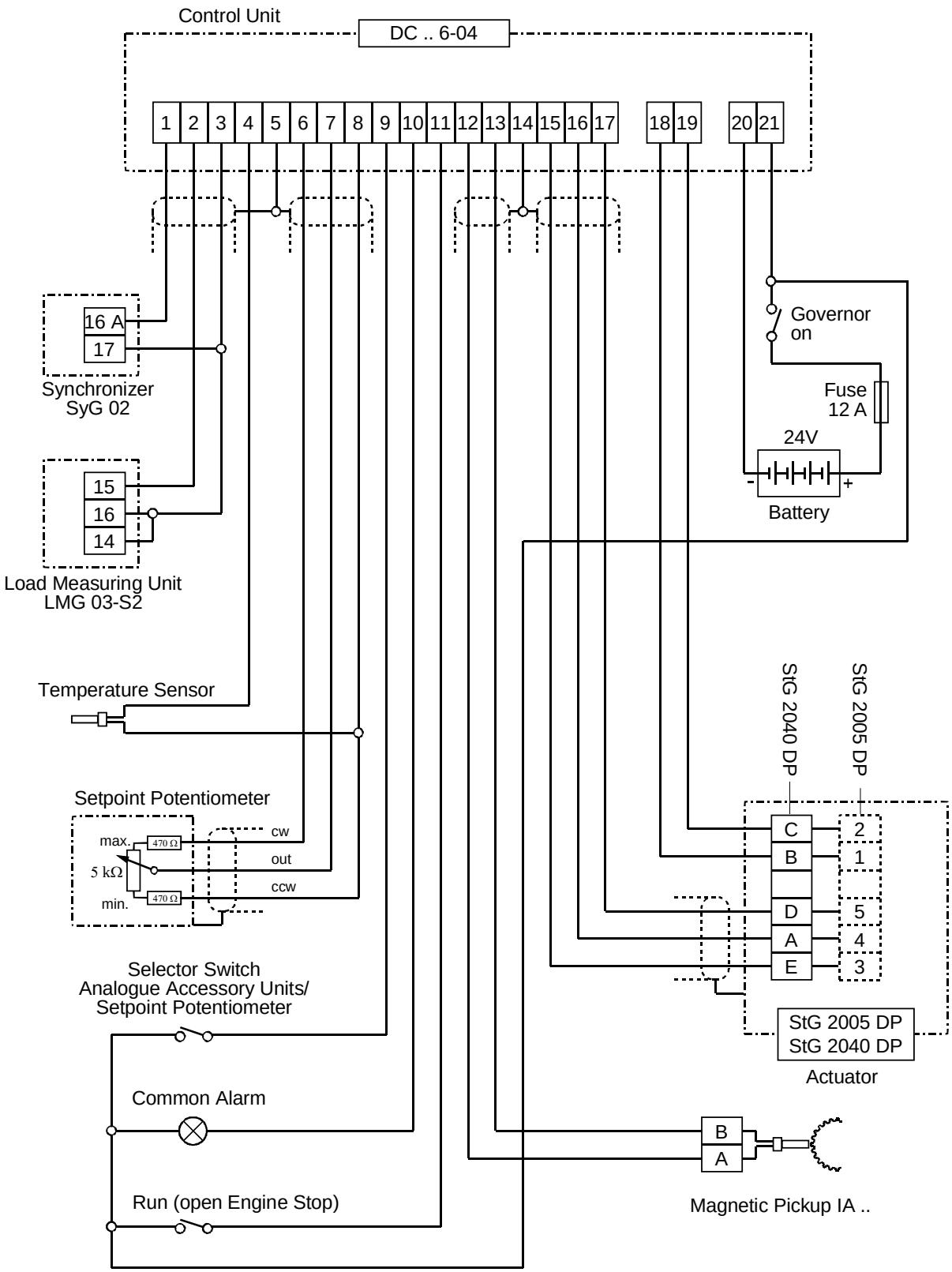

Fig. 18: Connection Diagram for Variation DG 6-04

9.5 Connection for variation DG 6-05 (Extended General)

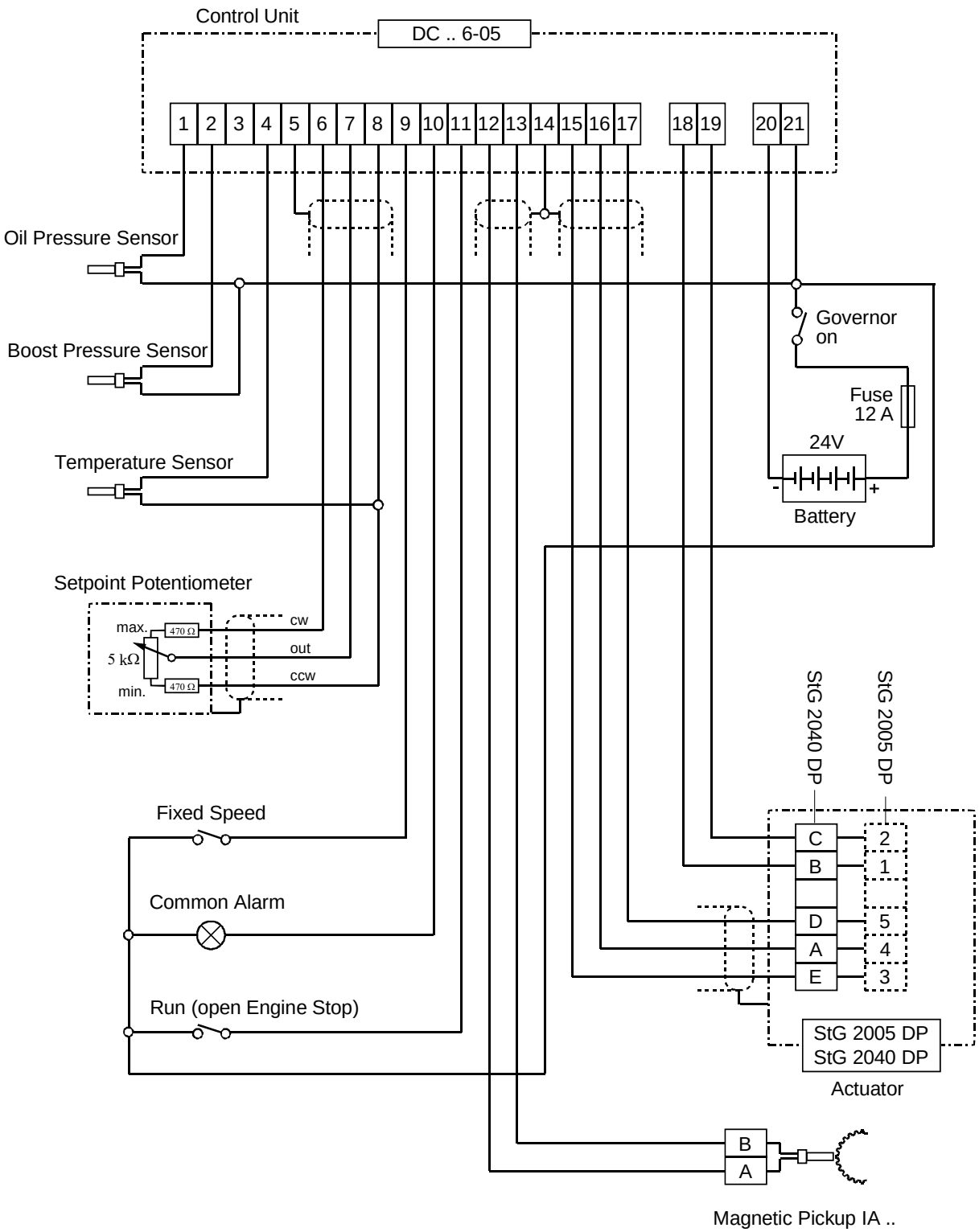

Fig. 19: Connection Diagram for Variation DG 6-05

9.6 Harness

Important: It is not possible to use all offered signals at the same time, because some inputs have to be assigned differently depending on the variation.

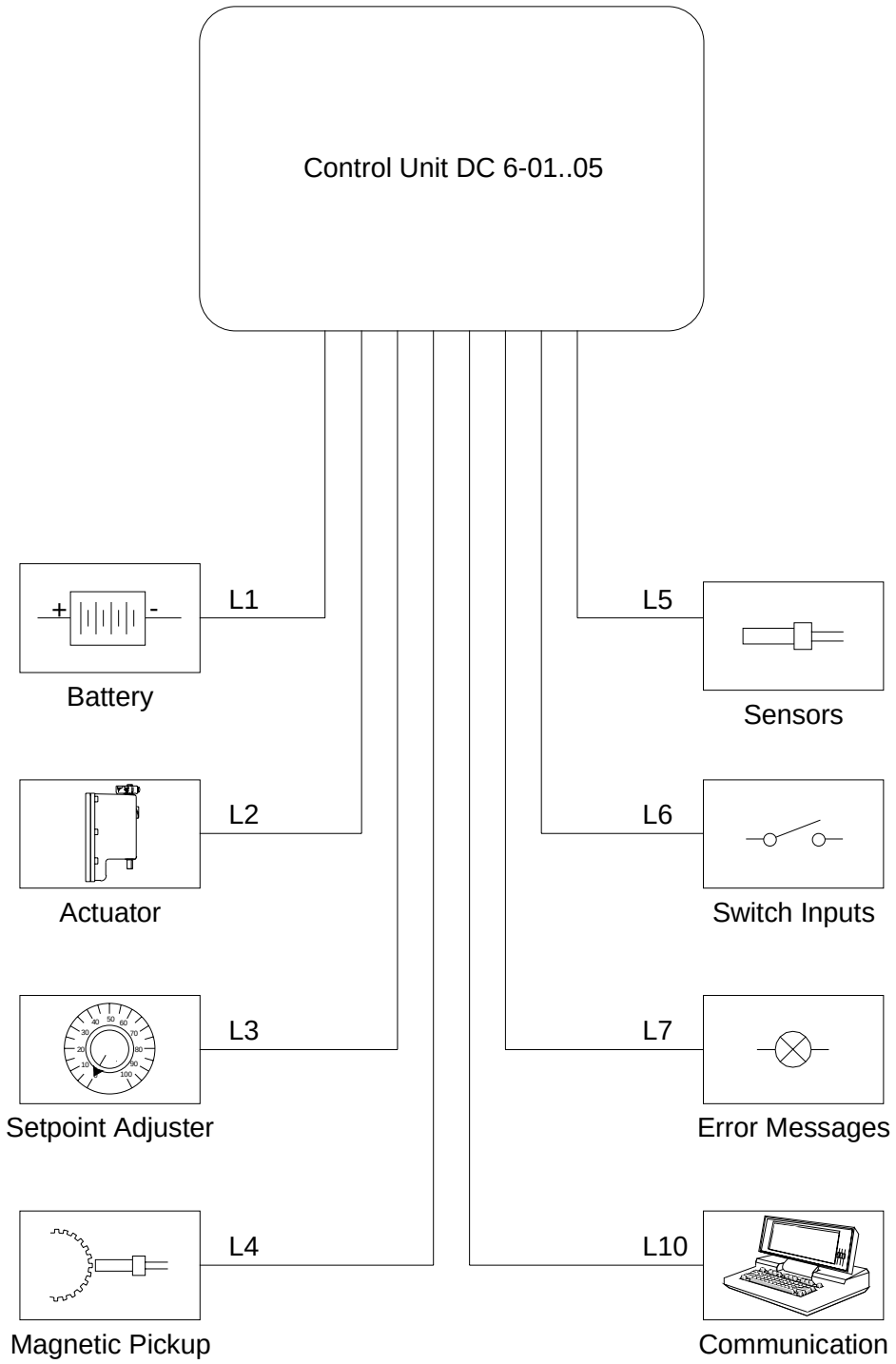

Fig. 20: Cable Designation

The allowed length and necessary cross-sections of the cables to connect are as follows:

L 1	Power supply	max. 15 m	2 x 2.50 mm²
L 2.1	Actuator feedback		3 x 0.75 mm²
L 2.2	Actuator drive	up to 10 m	2 x 2.50 mm²
		over 10 - 20 m	2 x 4.00 mm²
L 3.1	Set point potentiometer		3 x 0.75 mm²
L 3.2	4 - 20 mA input		2 x 0.75 mm²
L 3.3	0 - 5 V		2 x 0.75 mm²
L 3.4	Synchronizer		2 x 0.75 mm²
L 3.5	Load measuring unit		2 x 0.75 mm²
L 4	Magnetic pickup		2 x 0.75 mm²
L 5.1	Temperature sensor		2 x 0.75 mm²
L 5.2	Boost sensor		2 x 0,75 mm²
L 5.3	Oil pressure sensor		2 x 0.75 mm²
L 6.1	Engine stop		1 x 0.75 mm²
L 6.2	Increase speed		1 x 0.75 mm²
L 6.3	Decrease speed		1 x 0.75 mm²
L 6.4	other switch functions		1 x 0.75 mm²

(the switches have to be supplied with battery plus)

L7	Error message	1 x 0.75 mm²

(the error lamp has to be supplied with battery plus, ground is switched)

10 Parameterization Possibilities

The software for the **HEINZMANN** series PANDAROS has been designed in a way that will allow programming both at the **HEINZMANN** factory and by the engine manufacturer.

Since erroneous programming can cause considerable damages, full use should be made of the level structure and the user masks.

As a principle, first programming should always be conducted by experienced personnel and must be checked before first commissioning the engine. If possible, a **HEINZMANN** specialist should be consulted when first programming is performed.

The following sections describe the possibilities of parameterize the control unit:

10.1 Parameterization at the Factory

During final inspection at the factory, the function ability of the unit is checked by a test programme. If the operational data for the control unit is available, the test programme is carried out using this data. It is then only the dynamics data and if need be the fuel limitations and sensors that will have to be calibrated on the engine.

10.2 Parameterization with the Hand Held Programmer 3

All Parameterization can also be done by means of the hand held programmer 'Programmer 3'. This handy device is particularly suited for development and series calibration as well as for servicing.

10.3 Parameterization with the Keyboard on the Control Unit

The Parameterization is here the same as with the external hand held programmer 3.

10.4 Parameterization with the PC

Parameterization can also be conducted using a PC and the comfortable **HEINZMANN** software DC DESK. As compared with the hand held programmer, it offers the great advantage of having various curves graphically represented on the screen and being at the same time able to introduce changes as well as of having time diagrams displayed without an oscilloscope when commissioning the control unit on the engine. Furthermore, the PC offers a better overview as the PC programme has a menu structure and allows to have several parameters continuously displayed.

Besides, the PC programme permits to save and download the operational data to and from diskettes.

10.5 Parameterization with User Masks

Principally, Parameterization may be performed with the help of user masks that have been provided by **HEINZMANN** or may conveniently be created by the user himself. Within a user mask, only those parameters are accessible that are actually needed.

10.6 Transferring Data Sets

Once parameterize a particular engine model and its application has been completed, the data set can be saved (in the hand held programmer or on a floppy disk). For other applications of the same kind the data set can then be downloaded into the respective control units.

10.7 Assembly Line End Programming

This type of parameterization is used by the engine manufacturer during the test bench run when the control unit is programmed in accordance with the engine requirements as laid down in the order.

11 Starting the Engine - Brief Instructions

11.1 Adjust clearance of magnetic pulse pickup.

11.2 Check program with respect to relevant parameters: number of teeth, speed, etc.

11.3 Calibrate sensors and set point adjusters, if necessary.

11.4 Make auto adjustment of actuator.

11.5 Set point potentiometer in mid-position:

P -	Gain	to	50
I -	Stability	to	0
D-	Derivative	to	0

If the dynamic values have already been determined for an installation, they can be programmed directly at this point.

Attention:	Over speed protection must be guaranteed!

11.6 Start engine and run it up to nominal speed using the set point potentiometer.

11.7 Increase gain (P-fraction) up to instability and reduce until stability is attained. Increase stability (I-fraction) up to instability and reduce until stability is attained. Increase derivative (D-fraction) up to instability and reduce until stability is attained.

With these values set, engine speed is to be disturbed briefly (e.g., by shortly pressing the stop switch), and the transient oscillations are to be observed.

11.8 Check over the entire speed range.

If for maximum and minimum speed other values than the programmed ones should result, this will be due to tolerances of the set point potentiometer. If the speed derivation is not acceptable, it will be necessary to measure the set point source.

11.9 Gain-correction (P-correction) for gas engines resp. for variable speed governors with larger speed ranges; adjust map if necessary.

11.10 Checking the remaining program items, e.g., starting fuel injection, ramp time, etc.

12 Order Information

Control Unit:

Designation DC X .6 - 0Y - (PG)

X = used actuator type 2005-DP or 2040-DP

Y = application variation 1 .. 5 (refer to the connection diagrams)

PG = when integrated Programmer is required, **only**

Before delivery, the control unit will be conformed on the hardware side to the application variation inclusive the actuator type. While doing so, the analogue inputs are calibrated, if necessary. The included software correspond to the application. All further adjustments as e.g. teeth number, speed range, limitation curves, dynamic parameters, start procedure etc. have to be set by the customer himself.

Actuator:

Here an actuator designation has to be given, as listed in chapter 8.

Magnetic Pickup:

Here an magnetic pickup designation has to be given, as listed in chapter 5.2.5.

Additional Sensors:

If additional sensors or a set point adjuster is necessary, the order information can be taken from the corresponding chapters.

Harness:

Generally it is recommended to produce the harness at **HEINZMANN**. Therefore the needed cable length for each connections has to be given.

The wiring to the actuator and to the magnetic pickup has to be done by **HEINZMANN** generally, because here plugs from **HEINZMANN** are used where the contacts of the cables have to be soldered.

The order designation of each cable can be taken from the chapter 9.6.

13 Order Specifications for Manuals

There is no charge for our technical manuals ordered in reasonable quantities.

Order the necessary manuals on our speed governors from your nearest
HEINZMANN location.
(Please click on “HEINZMANN location” to see the list of our subsidiaries and agents in the world).

Please include the following information:

- your name,
- the name and address of your company (you can simply include your business card),
- the address where you want the manuals sent (if different from above),
- the number(s) (as on front page bottom right) and title(s) of the desired manual(s),
- or the technical data of your **HEINZMANN** equipment,
- the quantity you want.

You can directly use the following fax-form for ordering one or several manuals.

We solicit comments about the content and the presentation of our publications. Please, send your comments to:

HEINZMANN GmbH & Co. KG
Service Department
Am Haselbach 1
D-79677 Schönau
Germany

Fax Reply

Order for HEINZMANN technical manuals

Fax-Hotline +49 7673 8208 194

☐ **Please send me the following manuals:**

Quantity	No. of the manual	Title

☐ **Please send me your new sales documentation about**

( ) the HEINZMANN Analogue Governors Application:.....

( ) the HEINZMANN Digital Governors Application:.....

( ) the HEINZMANN Gas Engine Equipment Application:.....

Company .....

Contact Person.....

Department.....

Address..... Country/Code/Town.....

Phone..... Fax.....

E-Mail.....

Activity.....

Date .....